VS ENVI® BMT Planero

SPARE PARTS LIST

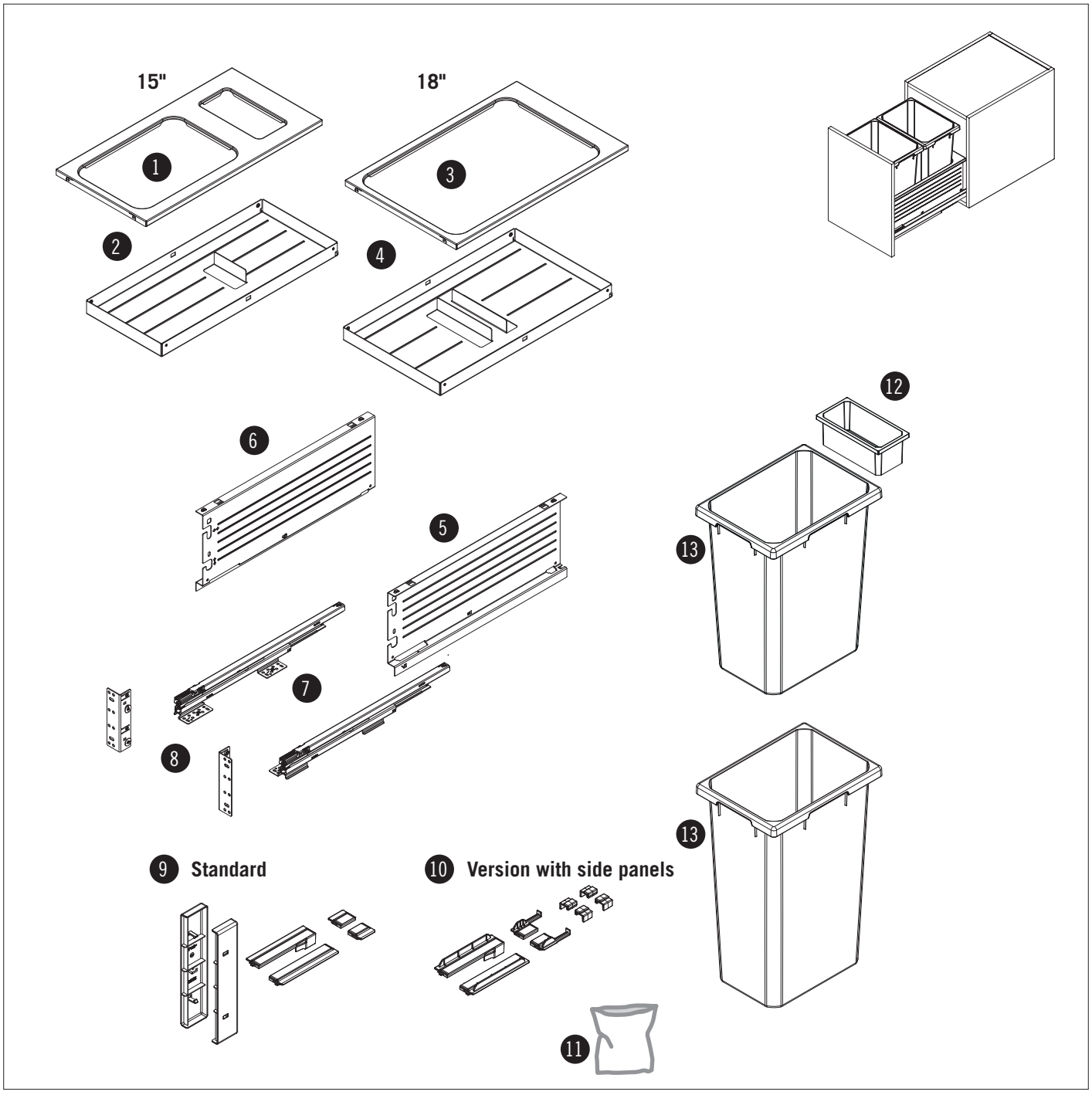

VAUTH SAGEL QUALITY MADE IN GERMANY

PLEASE NOTE: *We reserve the right to make technical changes and to improve product specifications.*

09 / 2023

LAVA

PART #	S-CODE	CABINET WIDTH	AMOUNT	DESCRIPTION
1	S10001008	15"	1	*Top frame BMT Planero 15"*
2	S10001009	15"	1	*Bottom plate BMT Planero 15"*
3	S10001020	18"	1	*Top frame BMT Planero 18"*
4	S10001021	18"	1	*Bottom plate BMT Planero 18"*
5	S10001010	15" + 18"	1	*Side panel right BMT Planero*
6	S10001011	15" + 18"	1	*Side panel left BMT Planero*
9	S10001012	15" + 18"	1	*Accessories bag BMT Planero "Standard"*
10	S10001013	15" + 18"	1	*Accessories bag BMT Planero "Version with side panels"*
12	90009117	15"	1	*Single box 1.5 qt*
13	90009118	15" + 18"	1	*Single bin 35 qt*
13	90009119	15" + 18"	1	*Single bin 50 qt*

SILVER

PART #	S-CODE	CABINET WIDTH	AMOUNT	DESCRIPTION
1	S10001014	15"	1	*Top frame BMT Planero 15"*
2	S10001015	15"	1	*Bottom plate BMT Planero 15"*
3	S10001022	18"	1	*Top frame BMT Planero 18"*
4	S10001023	18"	1	*Bottom plate BMT Planero 18"*
5	S10001016	15" + 18"	1	*Side panel right BMT Planero*
6	S10001017	15" + 18"	1	*Side panel left BMT Planero*
9	S10001018	15" + 18"	1	*Accessories bag BMT Planero "Standard"*
10	S10001019	15" + 18"	1	*Accessories bag BMT Planero "Version with side panels"*
12	90005833	15"	1	*Single box 1.5 qt*
13	90009118G	15" + 18"	1	*Single bin 35 qt*
13	90009119G	15" + 18"	1	*Single bin 50 qt*

COLOR NEUTRAL ITEMS

PART #	S-CODE	CABINET WIDTH	AMOUNT	DESCRIPTION
7	S10001025	15" + 18"	1 + 1	*Runner set BMT Planero*
8	S10001026	15" + 18"	1 + 1	*Set front attachment BMT Planero*
11	S10001024	15" + 18"	1	*Screw bag BMT Planero*

Vauth-Sagel USA LP

Address 1821 Baker Road
High Point, NC 27263

Phone +1 336 861 0740
Toll free +1 855 770 9121

Email vsusasales@vauth-sagel.com
Web www.vauth-sagel.com