VSUSAN Piecut

VAUTH SAGEL

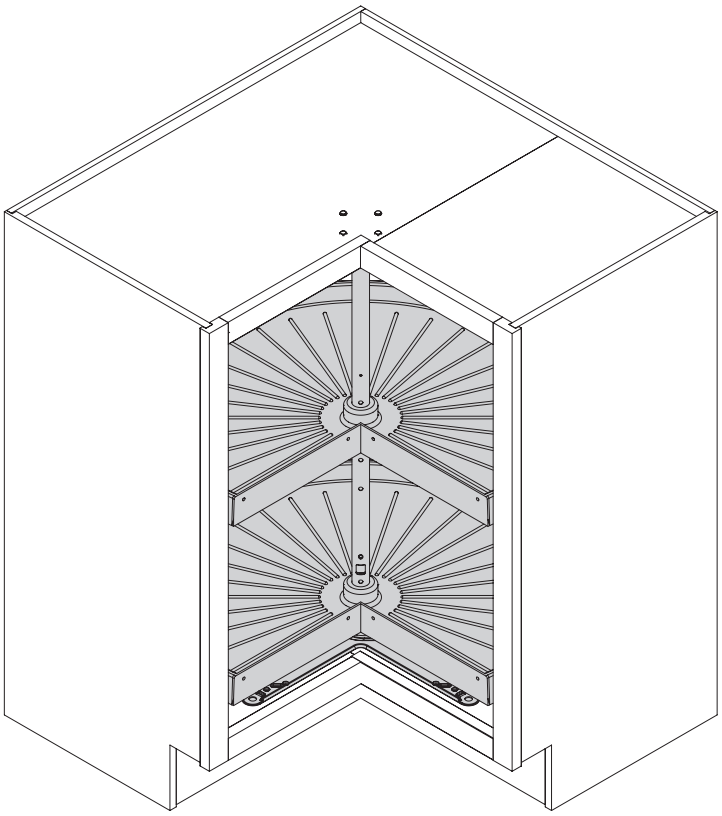

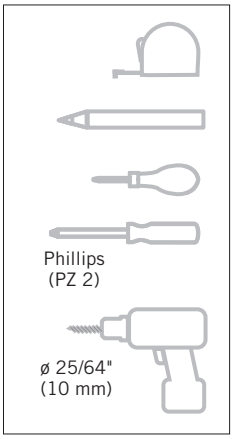

VAUTH SAGEL QUALITY MADE IN GERMANY

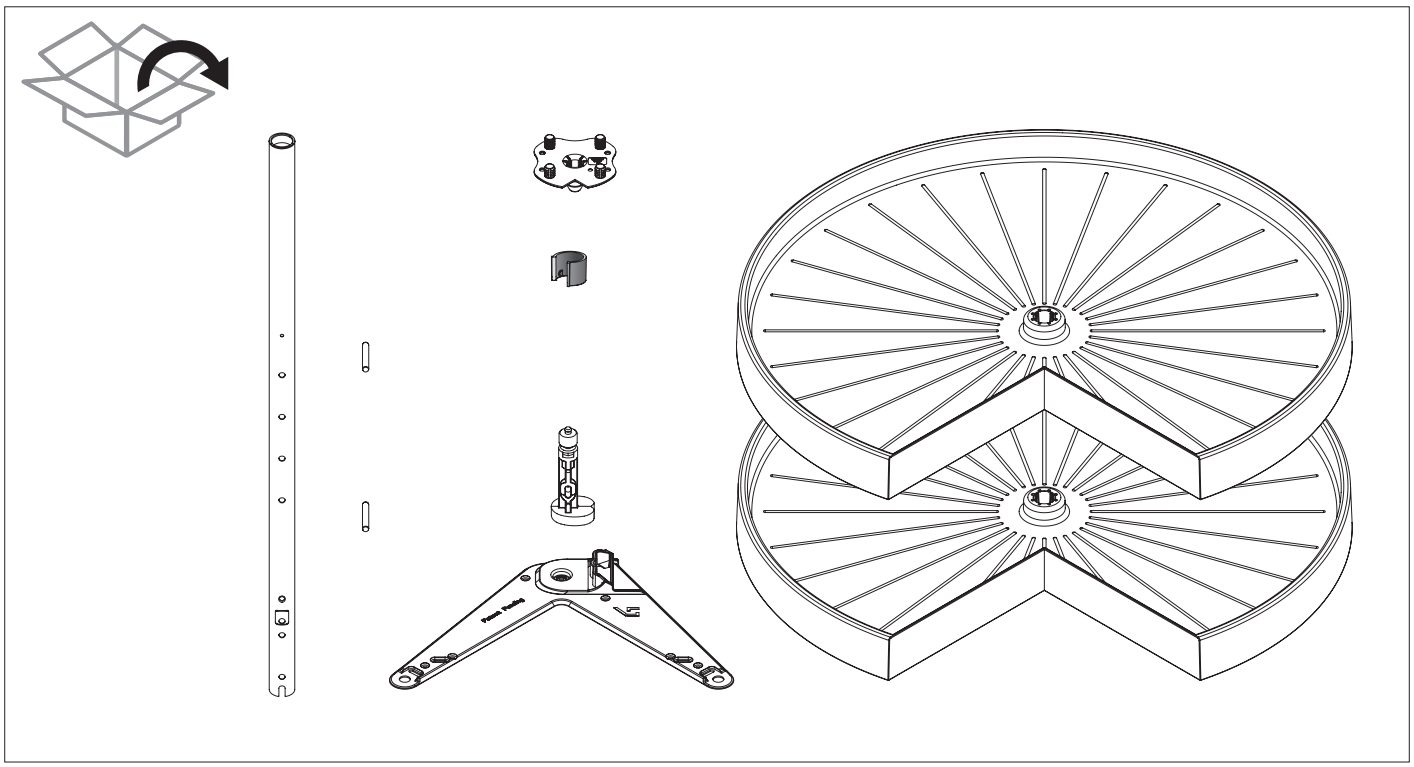

04 / 2021

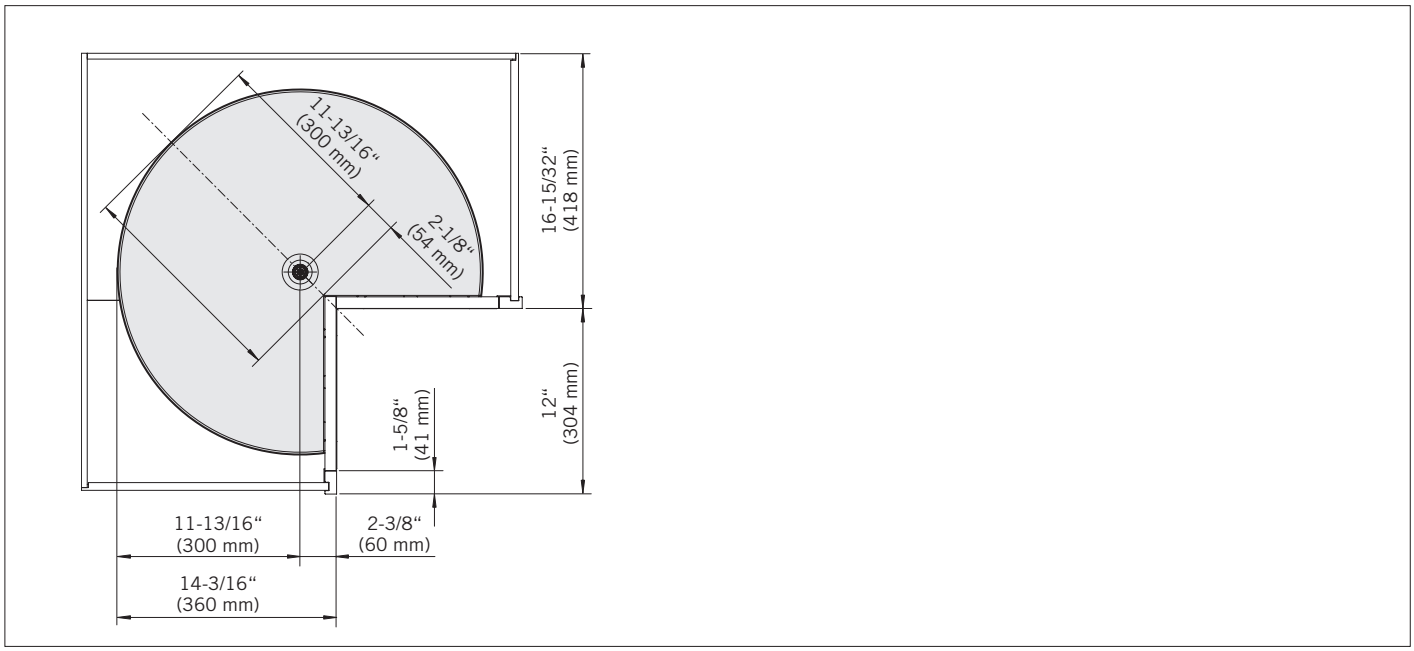

1



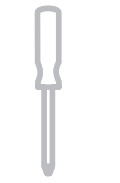

Phillips
(PZ 2)



ø 25/64"
(10 mm)

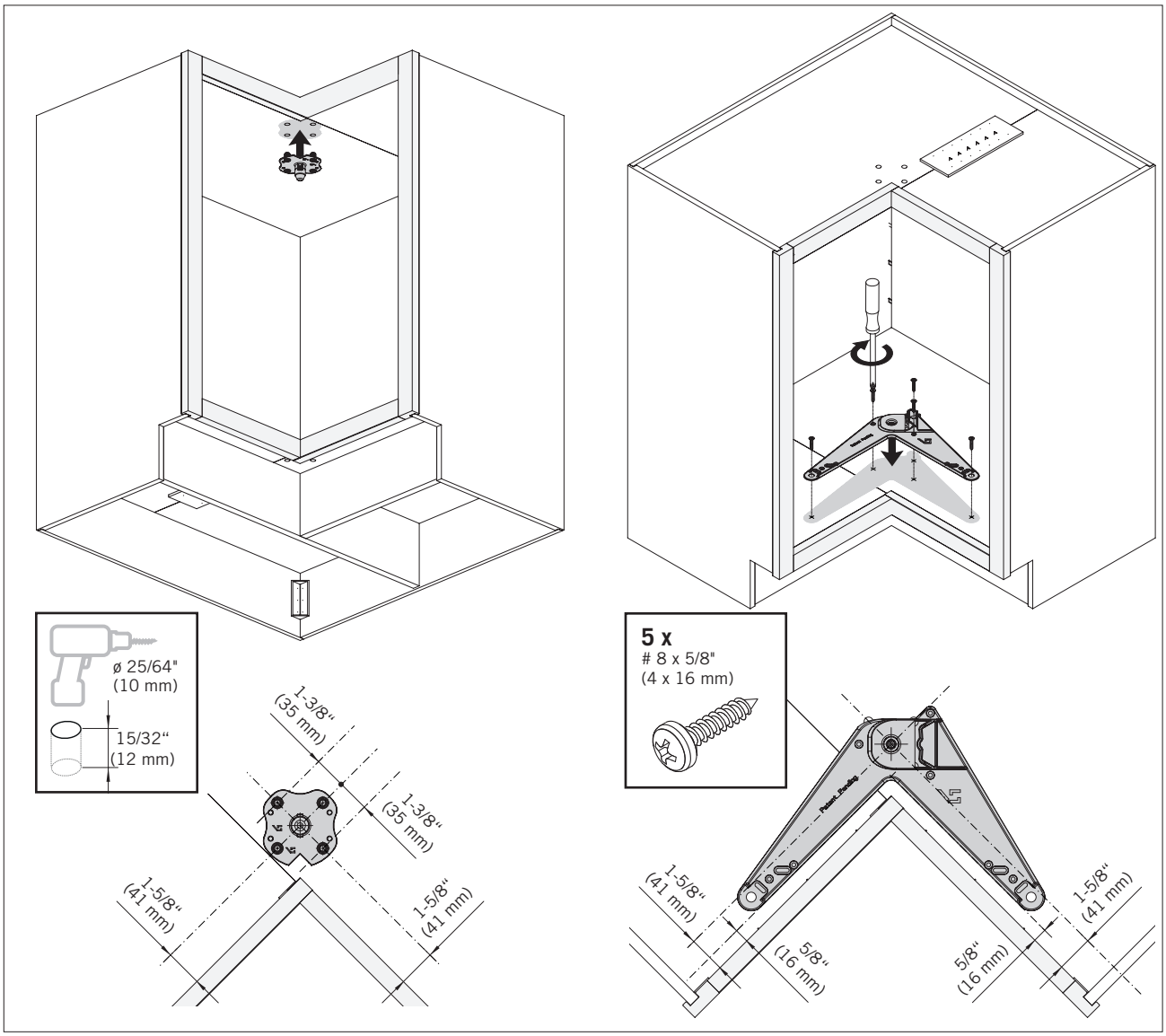

2

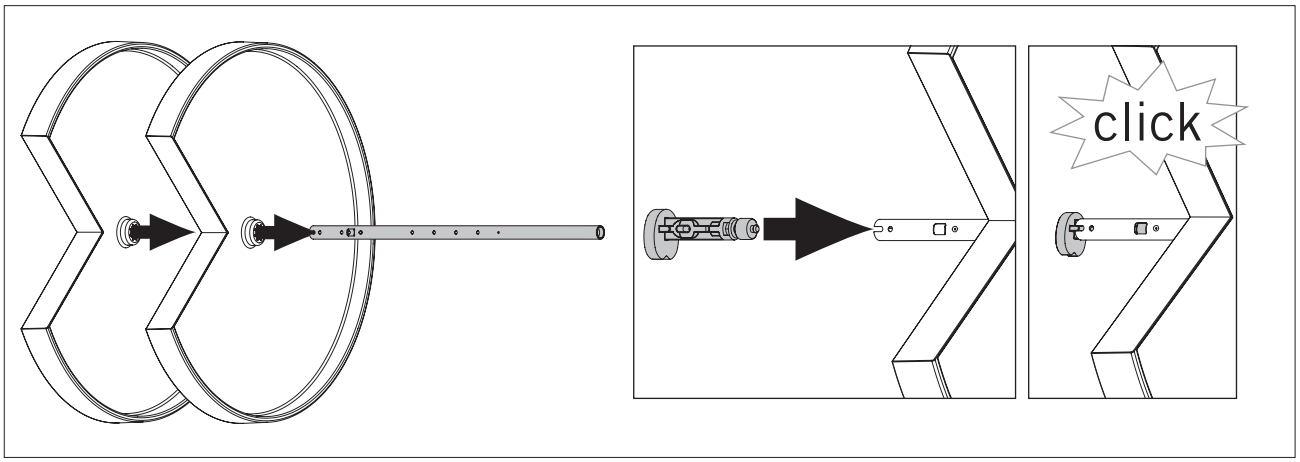

3

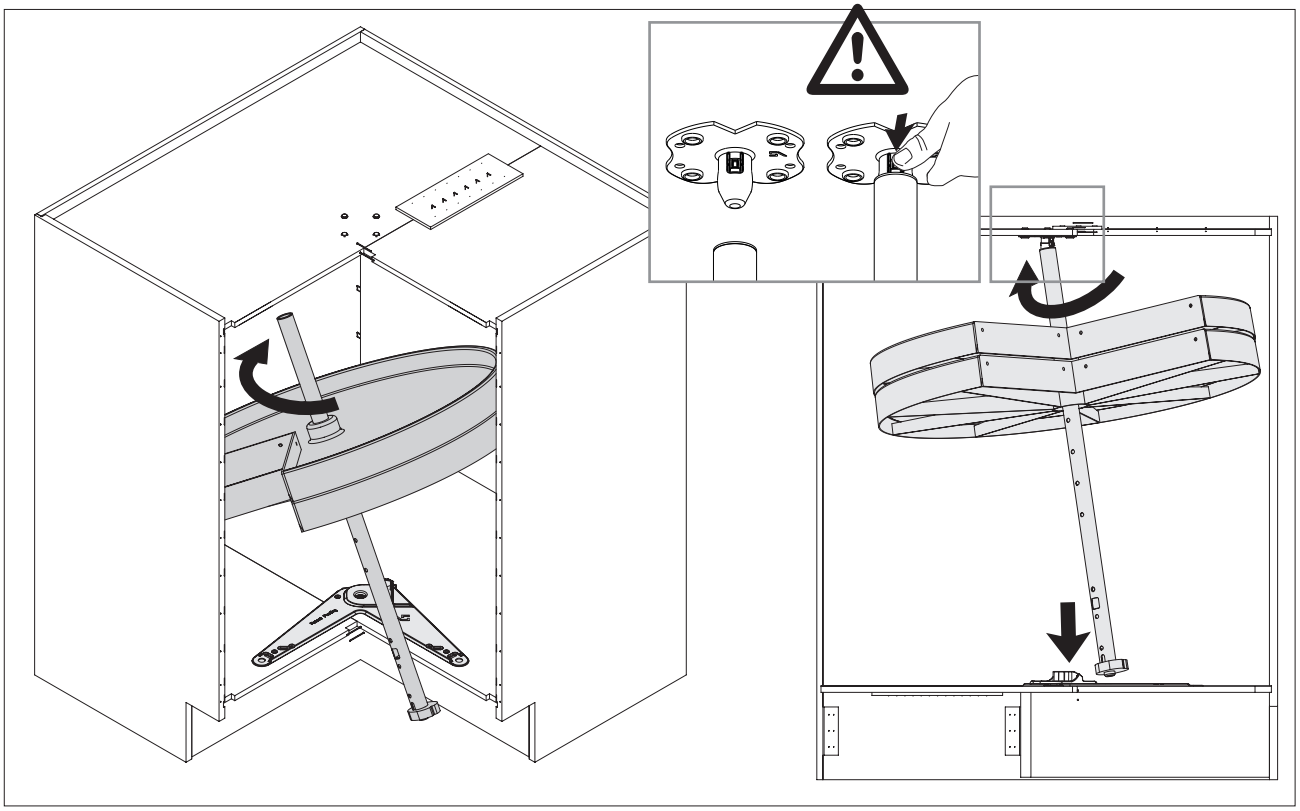

4

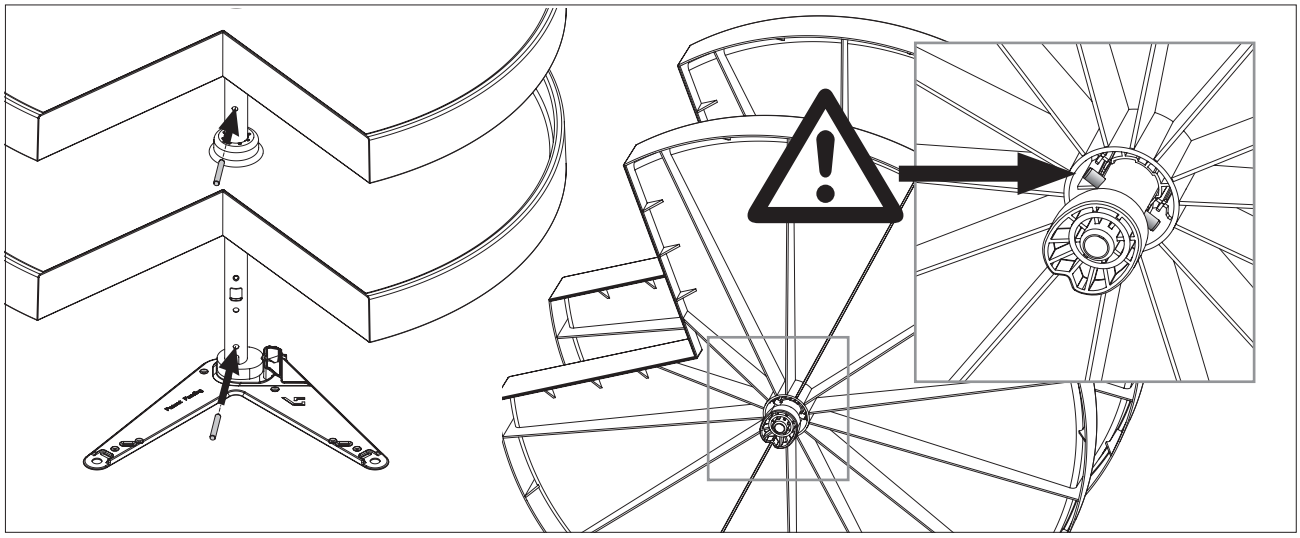

5

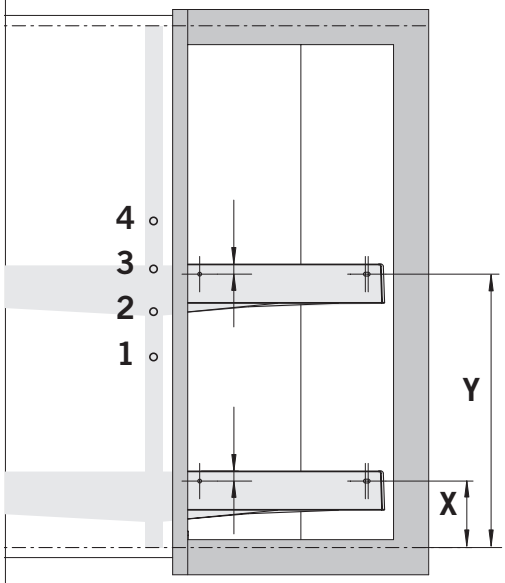

Ø	X	Y			
		1	2	3	4
18“	2-5/8“	11“	12-15/16“	14-15/16“	16-7/8“
24“	3-5/16“	11-5/8“	13-5/8“	15-9/16“	17-9/16“
28“	3-3/4“	12“	14“	15-15/16“	17-15/16“

6

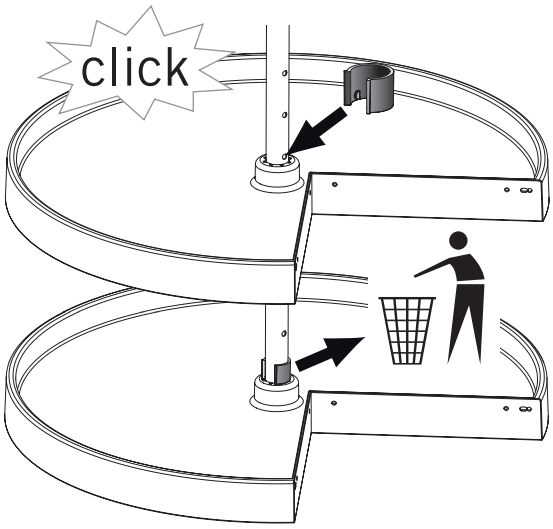

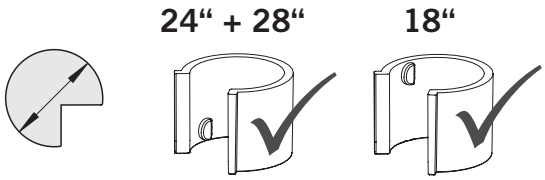

AFTER ASSEMBLY OF CABINET, BLACK SECURITY CLIP MAY BE DISPOSED

Vauth-Sagel USA LP

Address 1821 Baker Road
High Point, NC 27263

Phone +1 336 861 0740
Toll free +1 855 770 9121
Fax +1 336 861 0741

Email support@vauth-sagel-usa.com
Web www.vauth-sagel-usa.com