VS ENVI® BMT Planero

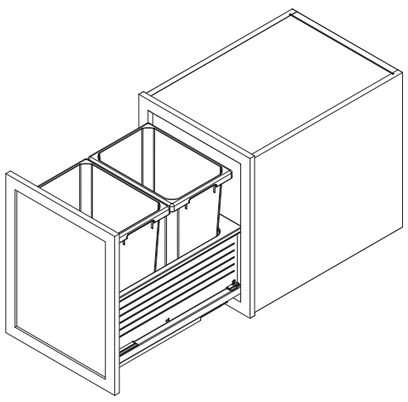

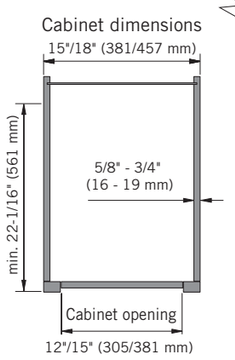

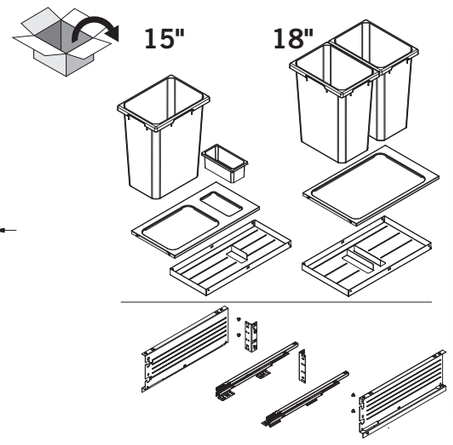

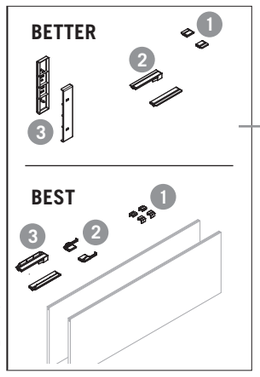



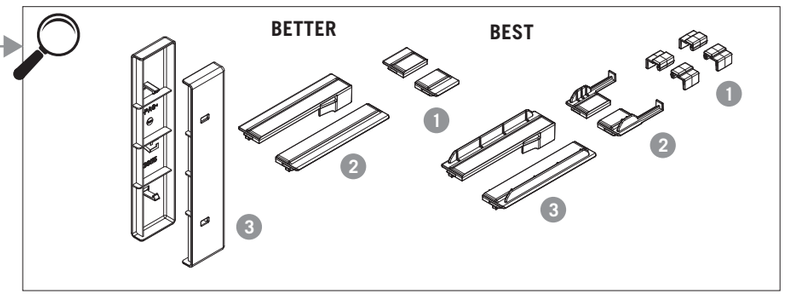

VAUTH SAGEL

VAUTH SAGEL QUALITY MADE IN GERMANY

1

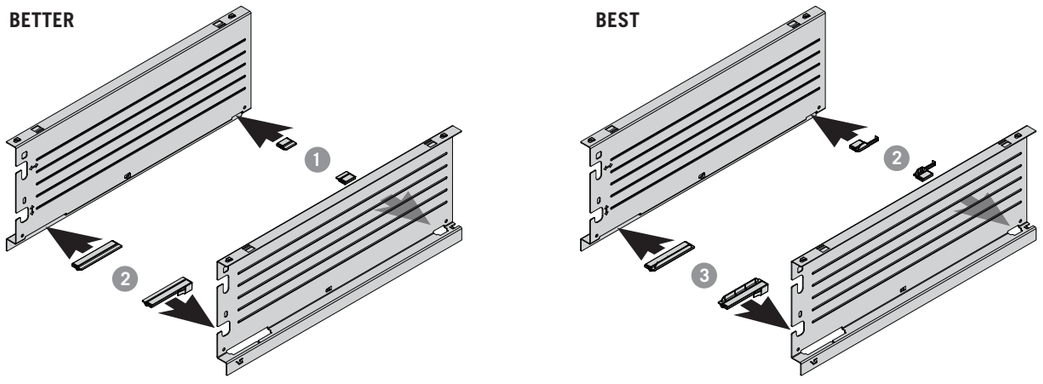

2

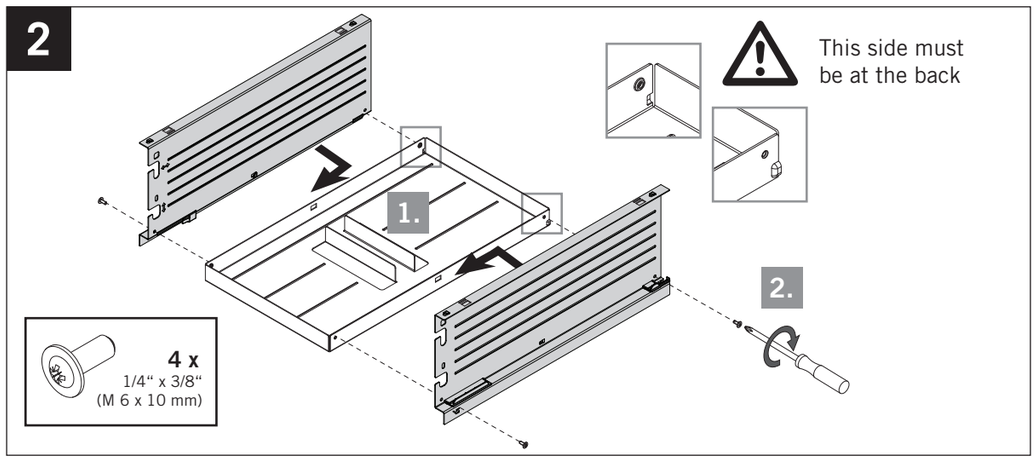

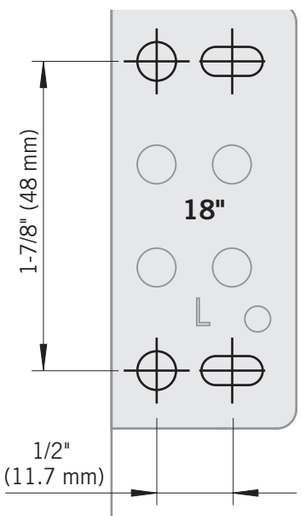

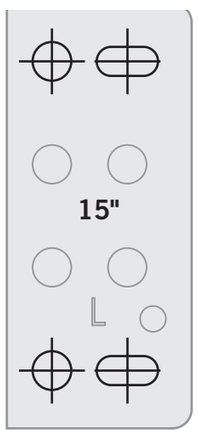

3

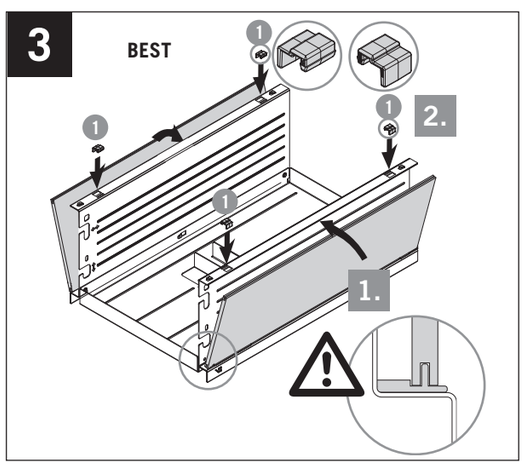

4

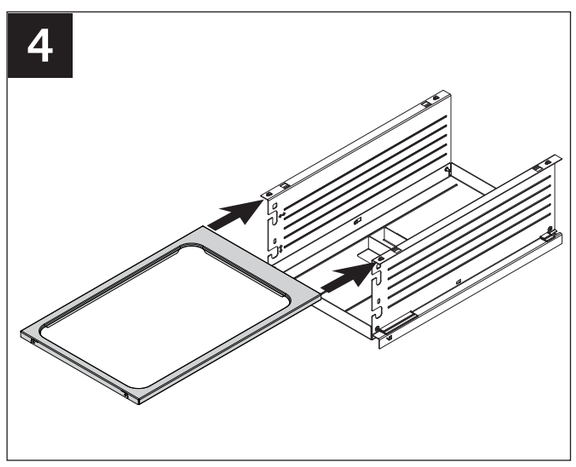

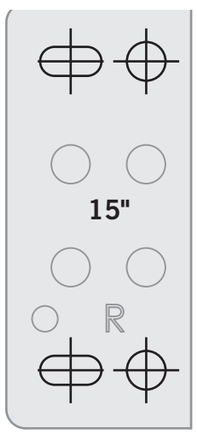

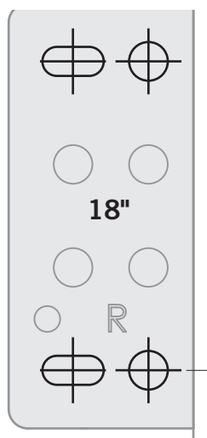

7-1/2" (192 mm)

5

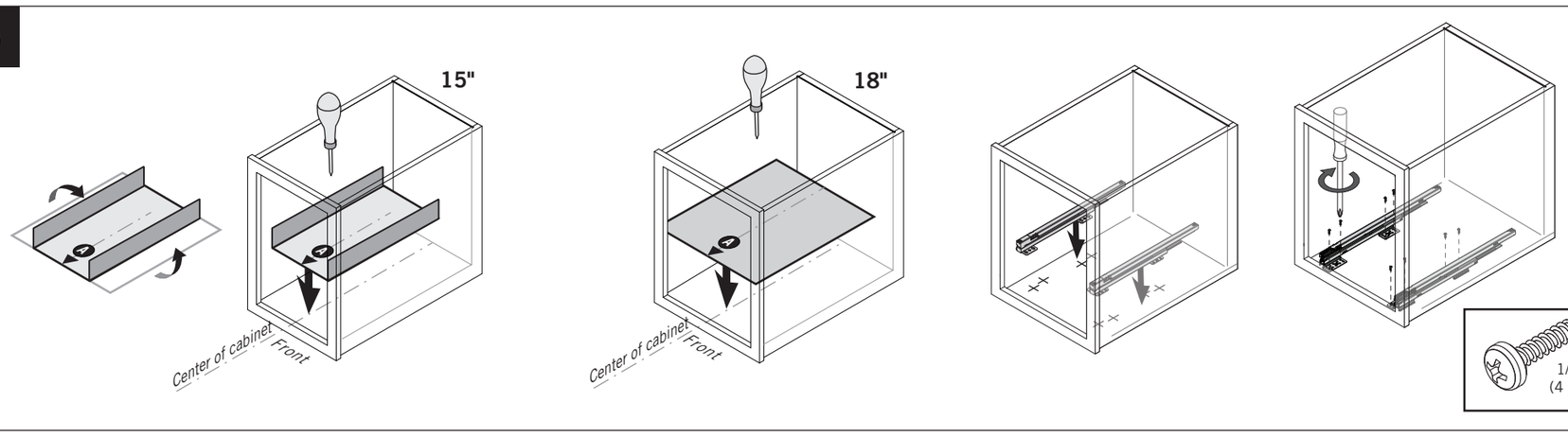

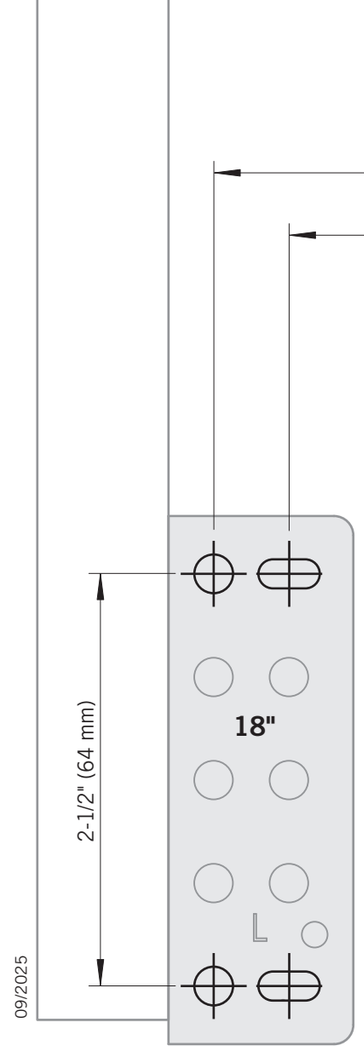

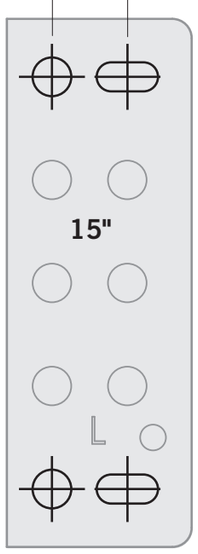

12" (305 mm)

11-1/16" (281.7 mm)

9" (229 mm)

8-1/16" (205.5 mm)

Center of cabinet

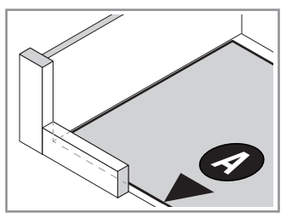

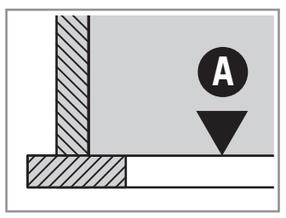

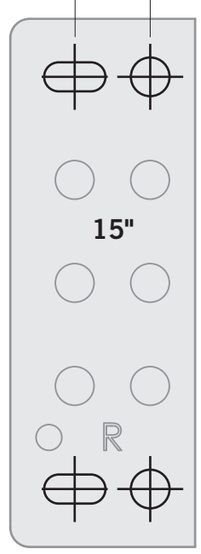

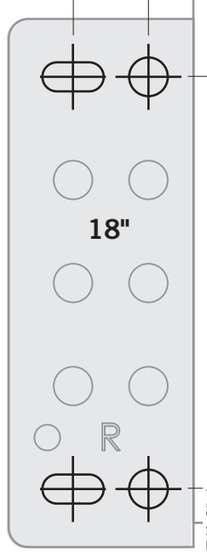

2-1/2" (64 mm)

7/16" *
(11 mm)

* this dimension refers to a faceframe thickness of 3/4" (19 mm)

09/2025

44012081_03

VS ENVI® BMT Planero

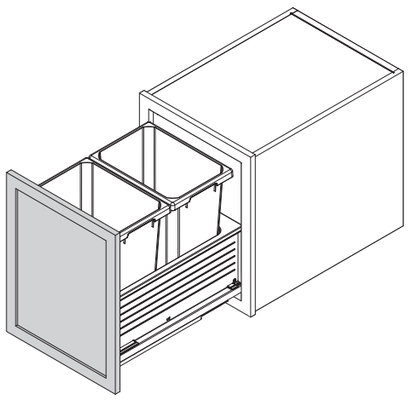



VAUTH SAGEL

VAUTH SAGEL QUALITY MADE IN GERMANY

6

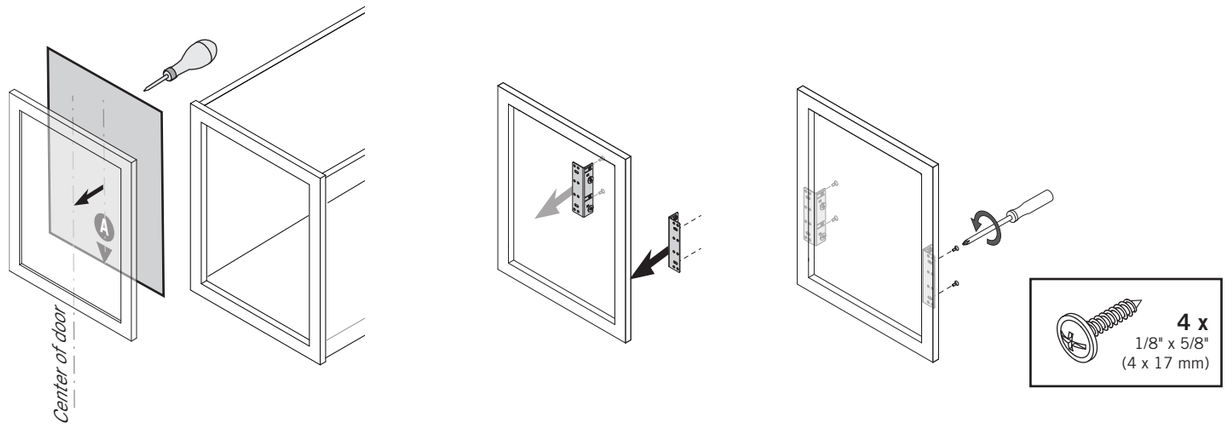

7

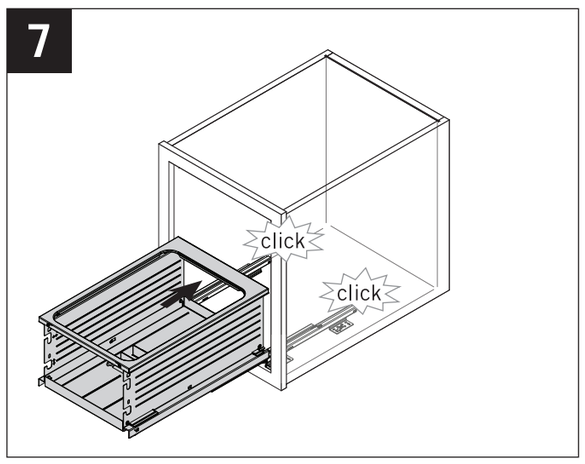

8

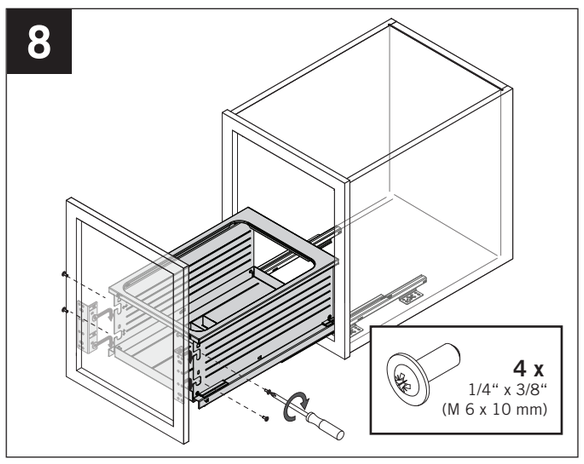

9

BETTER

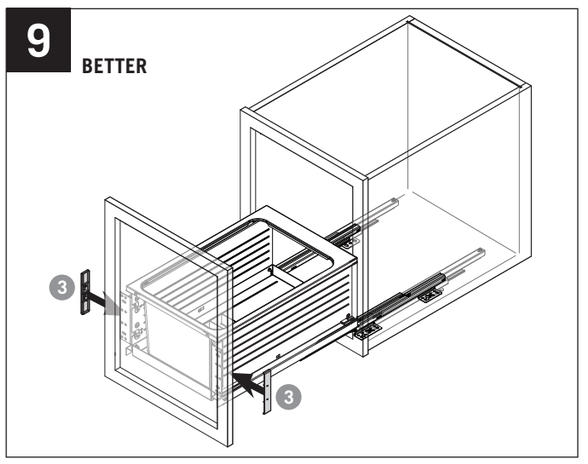

10

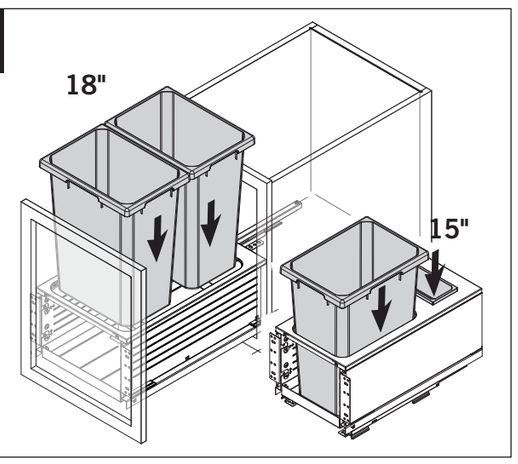

18" 14-11/16" (373 mm)

15" 11-13/16" (300 mm)

11

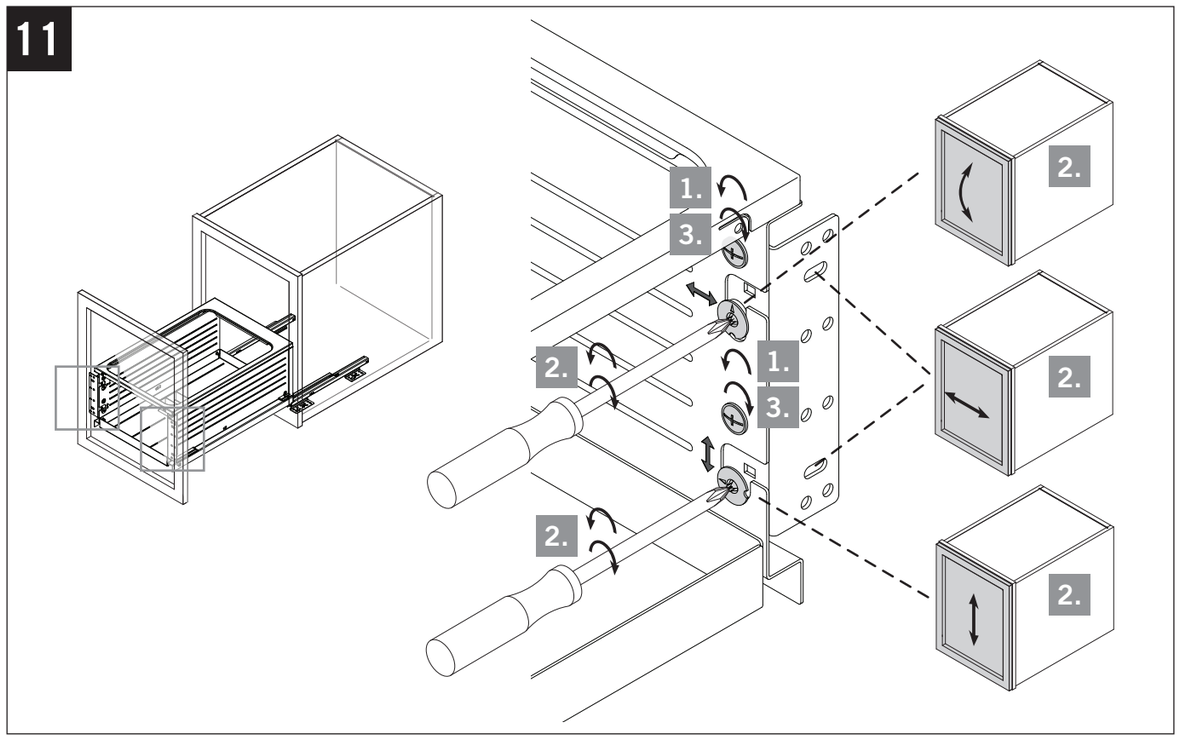

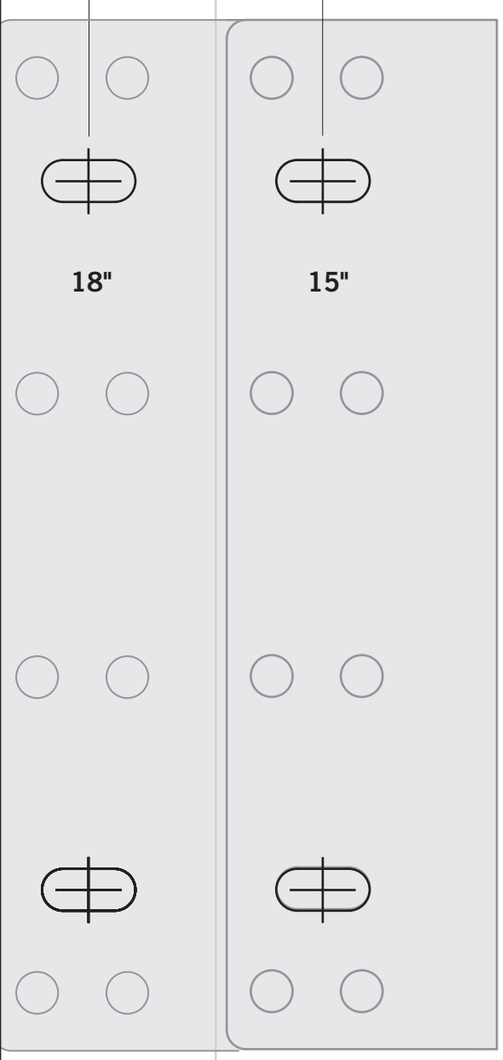

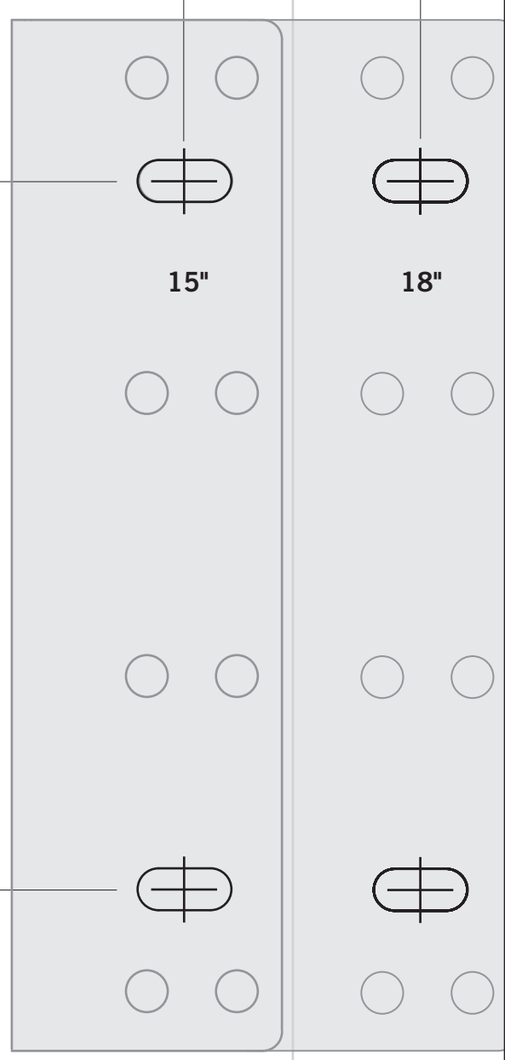

4-5/16" (110 mm)

4-1/16" (103 mm)

How to dismantle:

Pull out completely

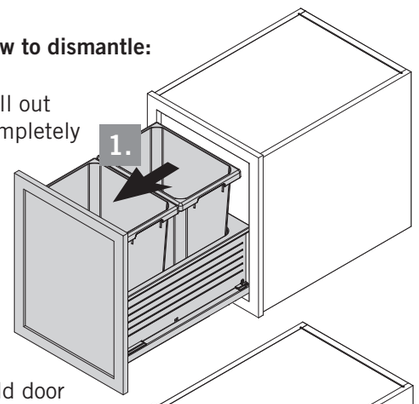

Hold door with both hands and lift up

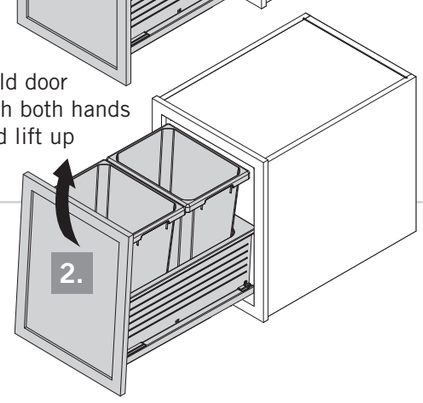

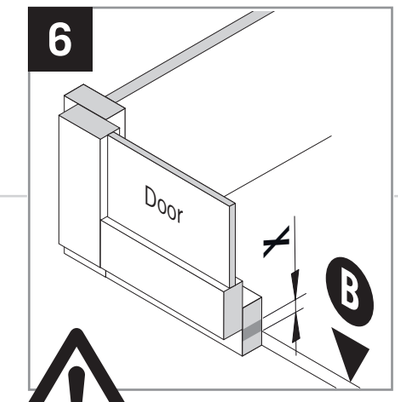

Add gap **X** = overlay

Center of door

B