VS COR® Flex

SPARE PARTS LIST

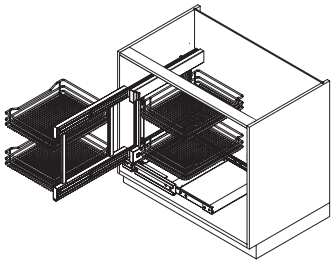

Installation version: left hand

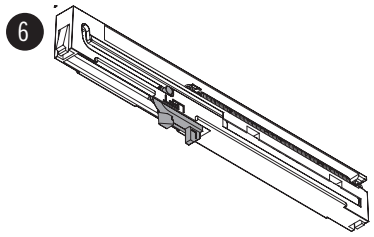



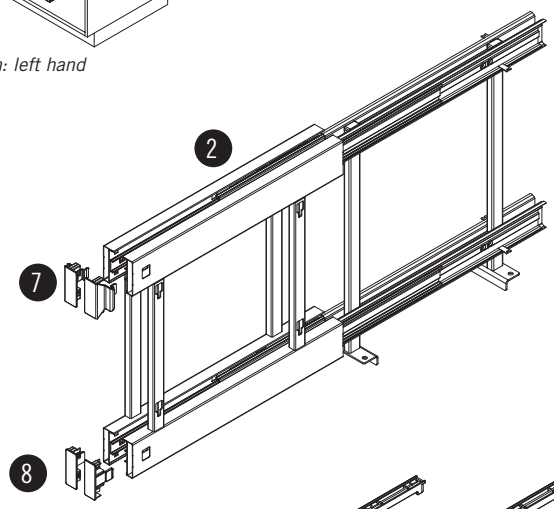

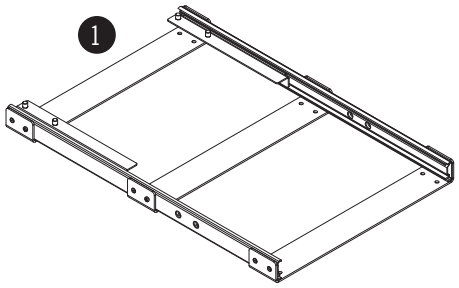

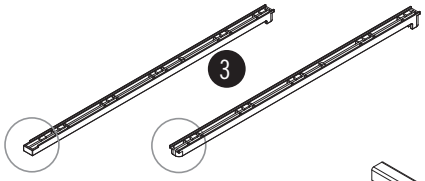

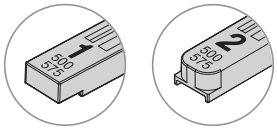

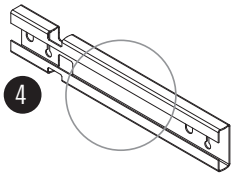



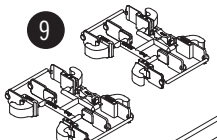



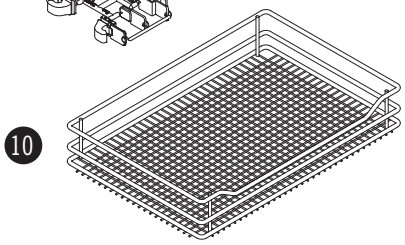



VAUTH SAGEL QUALITY
MADE IN GERMANY

LGA Qualitäts-Zertifikat
mit Sicherheit geprüfte Qualität
www.lga.info
ID 1111220299

PLEASE NOTE: *We reserve the right to make technical changes and to improve product specifications.*

01 / 2024

left hand installation

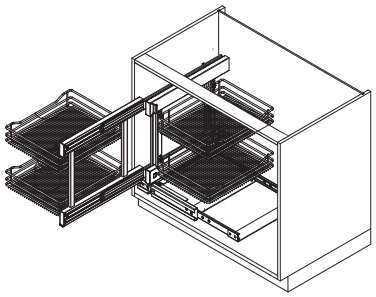

right hand installation

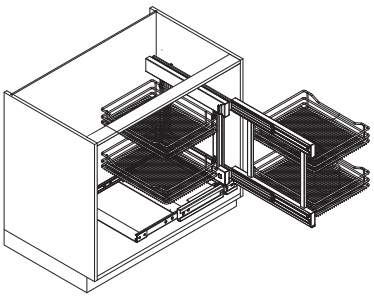

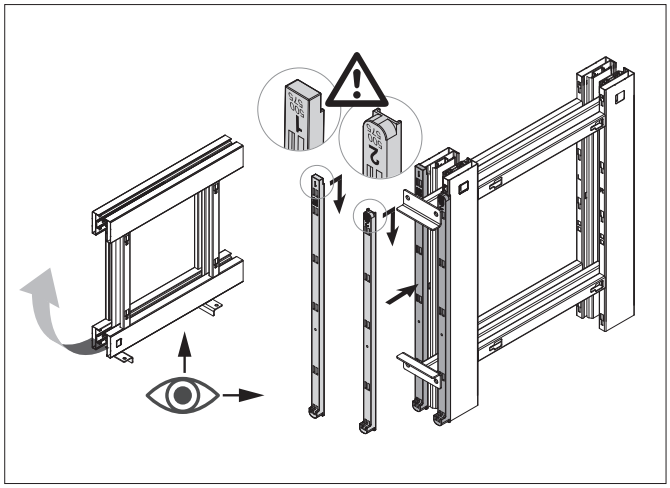

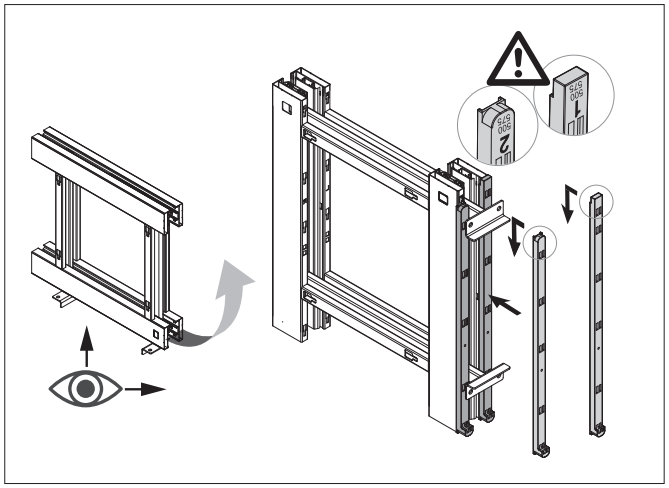

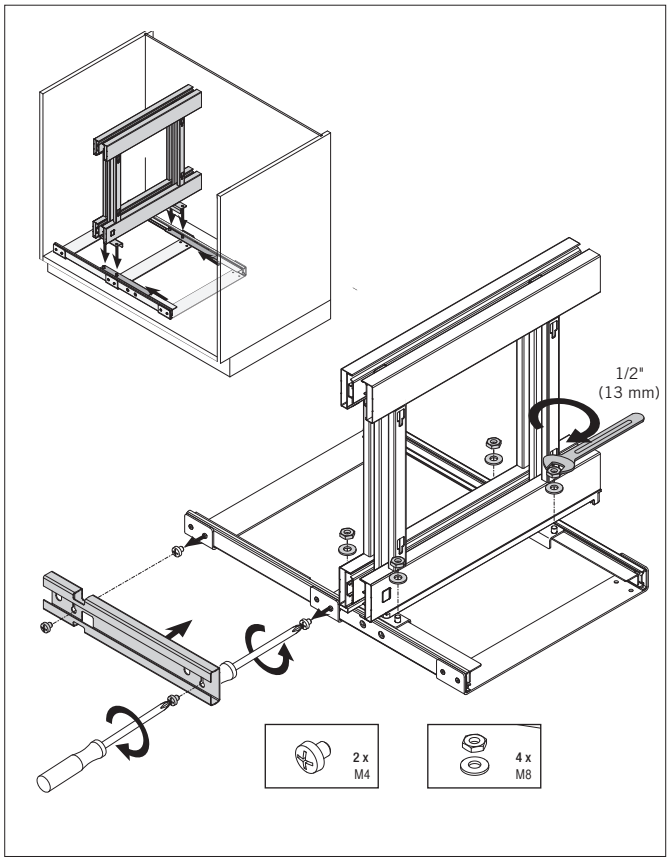

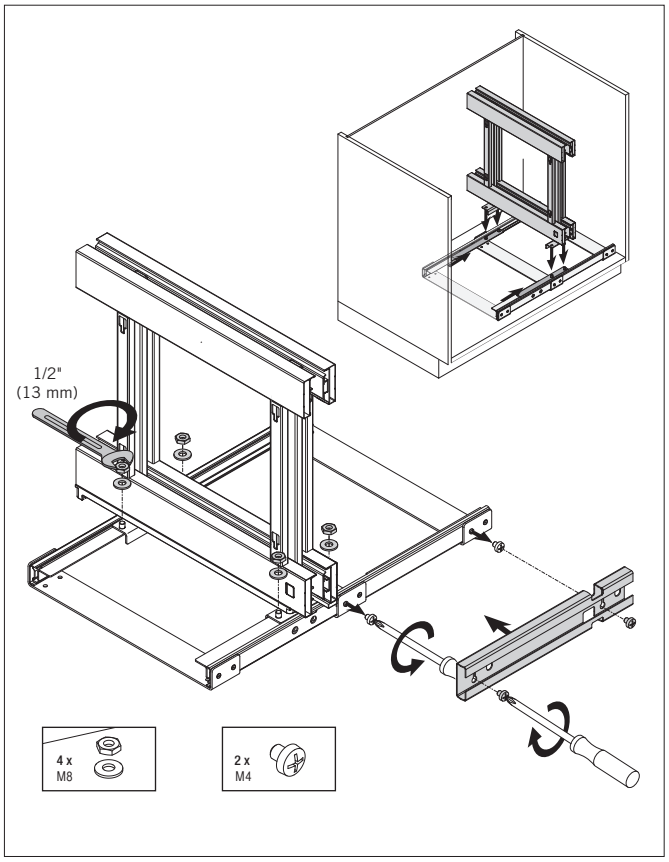

LAVA

PART #	S-CODE	CABINET WIDTH	AMOUNT	DESCRIPTION
1	S10000576	36"	1	*Repair kit bottom frame 36" (900-500), lava*
1	S10000579	39"/48"	1	*Repair kit bottom frame 39"/48" (1000/1200-D500), lava*
2	S10000584	36"/39"/48"	1	*Repair kit guide frame 36"/39"/48" (900/1000/1200-500), lava*
3	S10000590	36"/39"/48"	1	*Bag with guide strip 1 + 2 500, lava*
4	S10000598	36"	1	*Control profile 36" (K900-T500), lava*
4	S10000601	39"/48"	1	*Control profile 39"/48" (K1000-T500), lava*
7 + 8	S10000604	36"/39"/48"	2 + 2	*Bag with 2+2 handle and cover cap, lava*
9	S10000544	36"/39"/48"	1	*Bag with 8 basket clips and 2 stoppers, left and right, lava*

PART #	DESCRIPTION
10	*For replacement of baskets please contact our internal sales department.*

PLATINUM

PART #	S-CODE	CABINET WIDTH	AMOUNT	DESCRIPTION
1	S10000575	36"	1	*Repair kit bottom frame 36" (900-500), silver*
1	S10000578	39"/48"	1	*Repair kit bottom frame 39"/48" (1000/1200-D500), silver*
2	S10000583	36"/39"/48"	1	*Repair kit guide frame 36"/39"/48" (900/1000/1200-500), silver*
3	S10000589	36"/39"/48"	1	*Bag with guide strip 1 + 2 D500, 7042*
4	S10000597	36"	1	*Control profile 36" (K900-T500), silver*
4	S10000600	39"/48"	1	*Control profile 39"/48" (K1000-T500), silver*
7 + 8	S10000603	36"/39"/48"	2 + 2	*Bag with 2+2 handle and cover cap, 7042*
9	S10000302	36"/39"/48"	1	*Bag with 8 basket clips and 2 stoppers, left and right, 7047*

COLOR NEUTRAL ITEMS

PART #	S-CODE	CABINET WIDTH	AMOUNT	DESCRIPTION
5	S10000602	36"/39"/48"	2	*Bag with 2 lense screws M4*8 for control profile* 4
6	S10000316	36"/39"/48"	1	*Damper 7042*
	S10000606	36"/39"/48"	1	*Hardware bag for guide frame assembly*
	S10000607	36"/39"/48"	1	*Hardware bag cabinet assembly*

PART #	DESCRIPTION
10	*For replacement of baskets please contact our internal sales department.*

Vauth-Sagel USA LP

Address 1821 Baker Road
High Point, NC 27263

Phone +1 336 861 0740
Toll free +1 855 770 9121

Email vsusasales@vauth-sagel.com
Web www.vauth-sagel.com