VS ENVI® BMT
Planero

For Frameless Cabinets

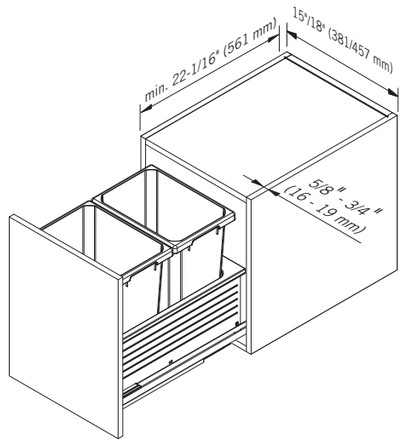



VAUTH SAGEL

VAUTH SAGEL QUALITY MADE IN GERMANY

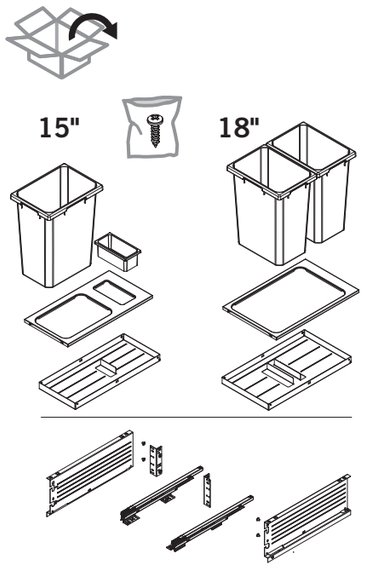

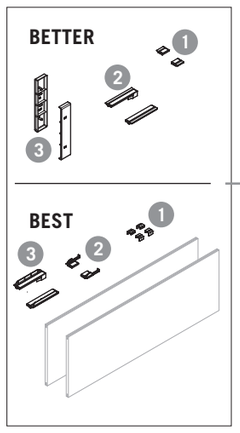

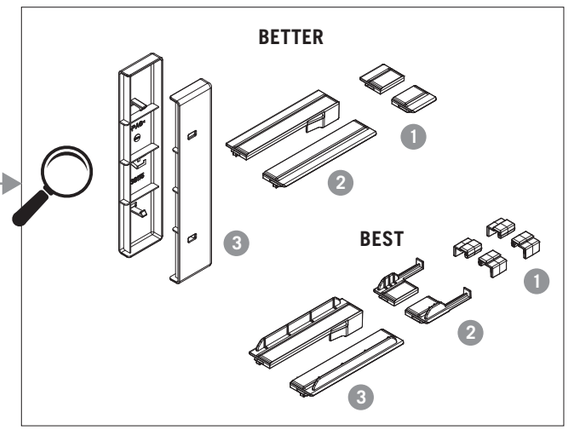

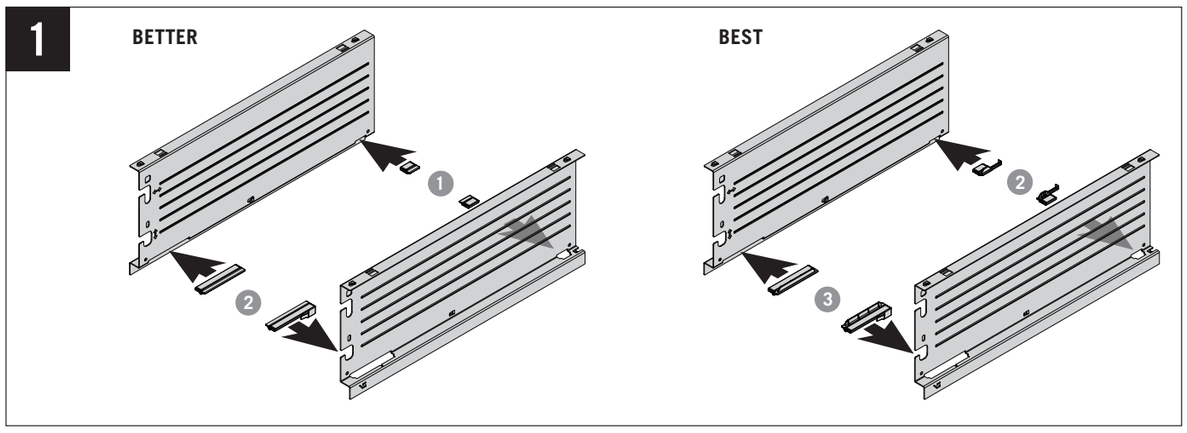

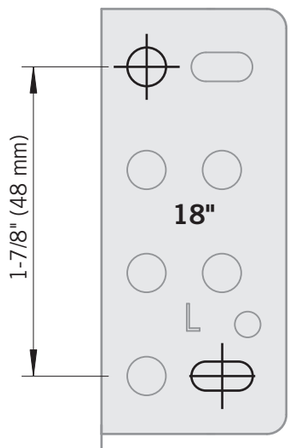

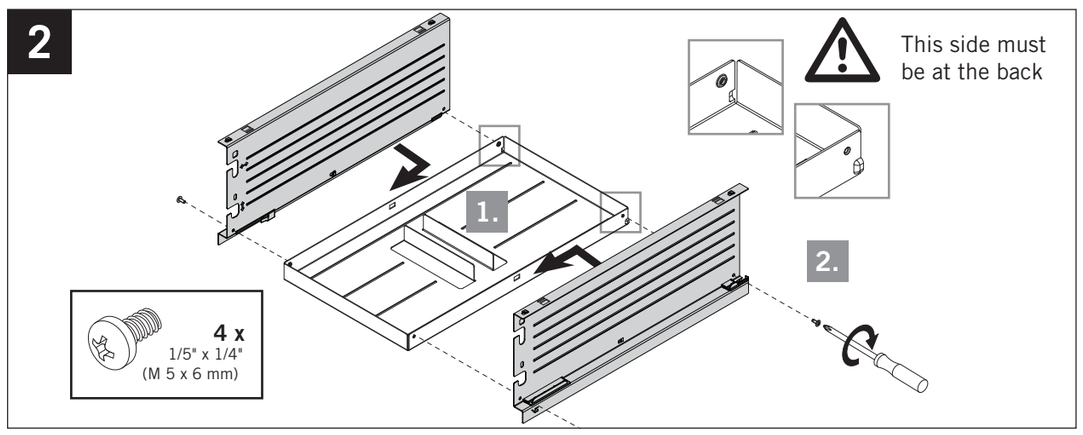

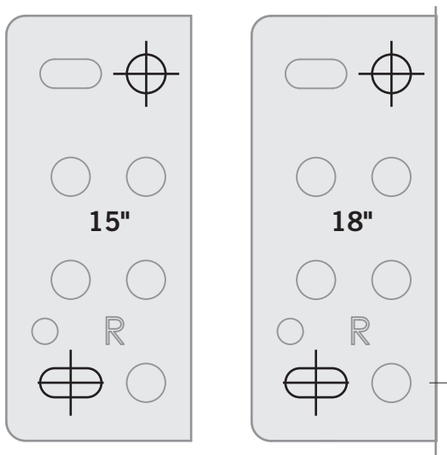

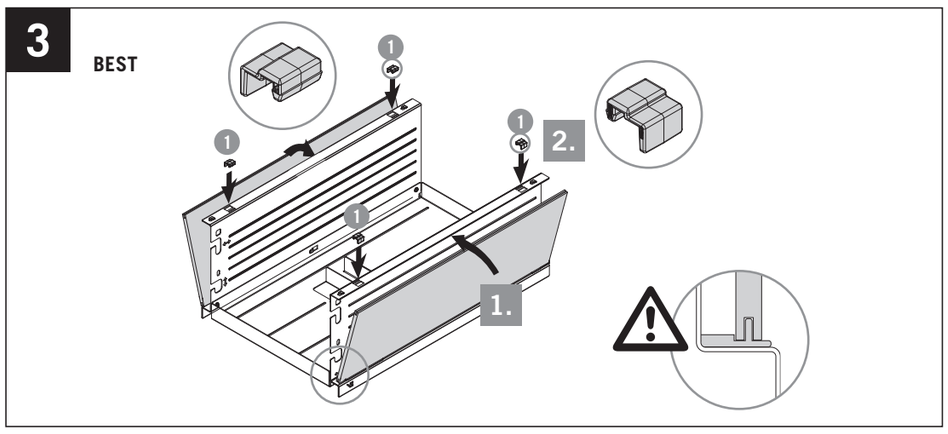

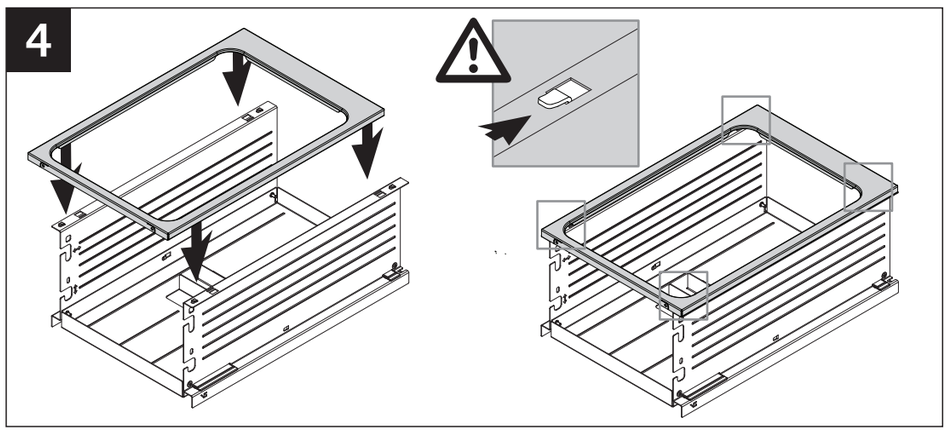

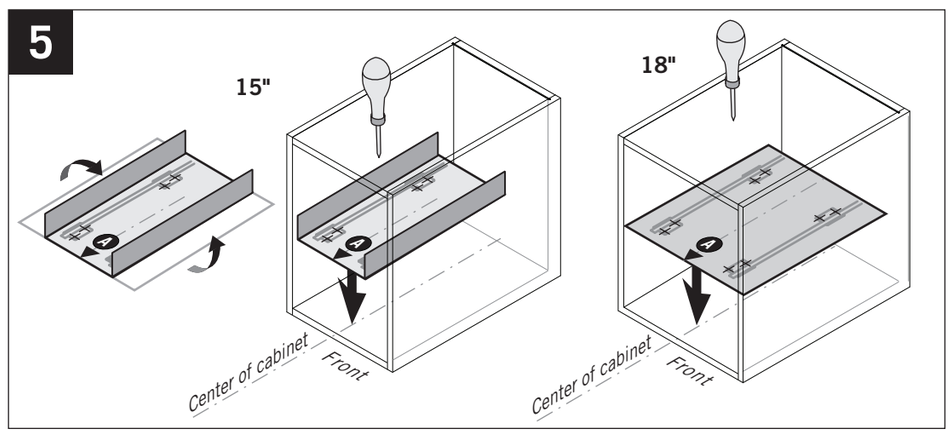

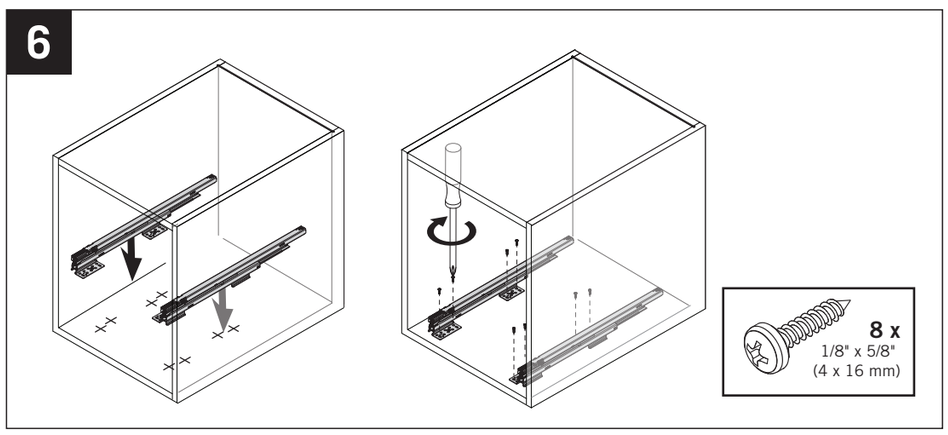

7-1/2" (192 mm)

12" (305 mm)

11-1/16" (281.7 mm)

9" (229 mm)

8-1/16" (205.5 mm)

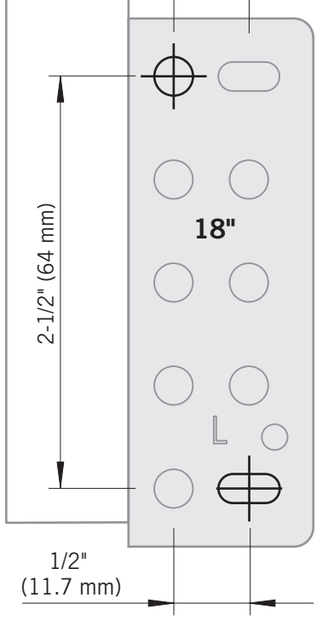

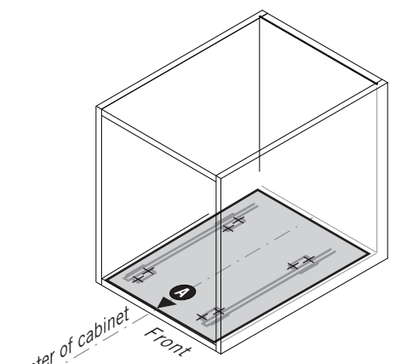

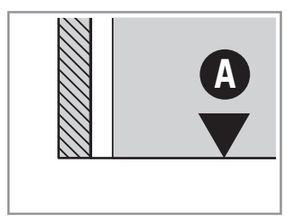



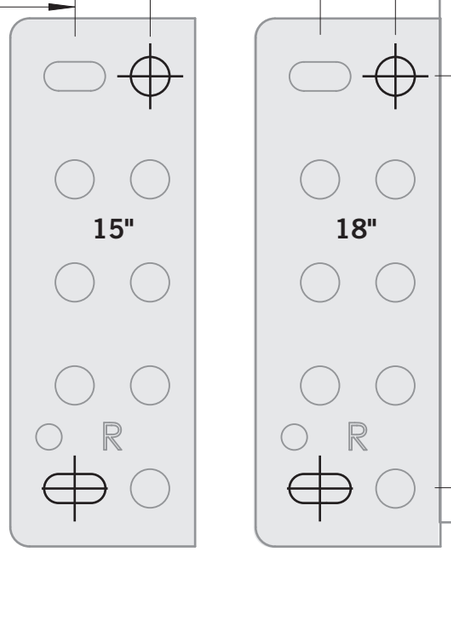

09 / 2025

44012310_03

VS ENVI® BMT
Planero

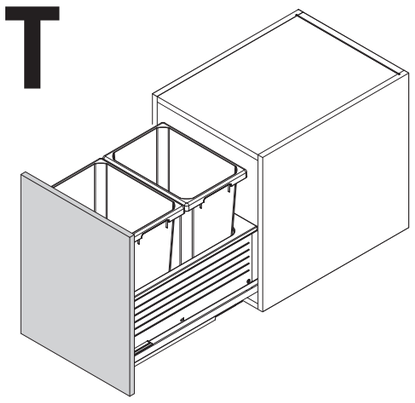



VAUTH SAGEL

VAUTH SAGEL QUALITY MADE IN GERMANY

7

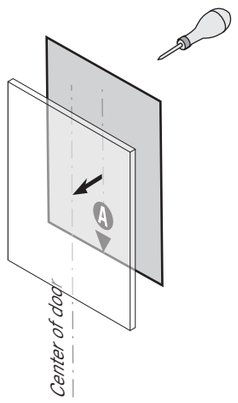

8

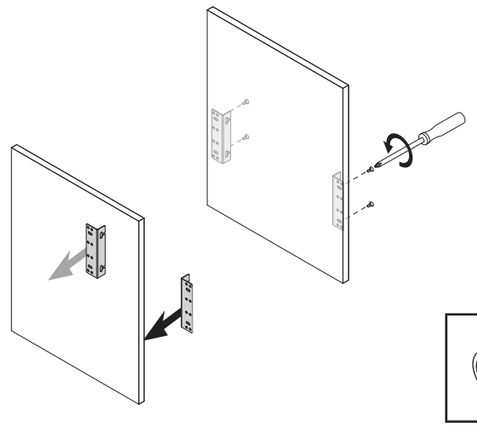

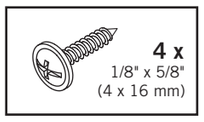

4 x
1/8" x 5/8"
(4 x 16 mm)

9

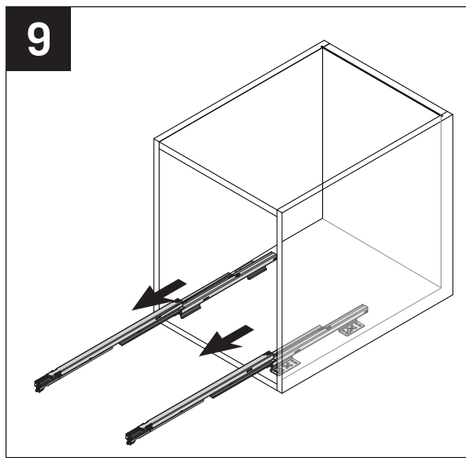

10

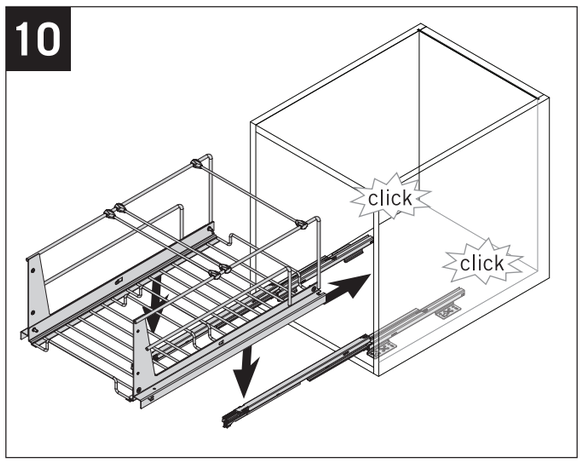

11

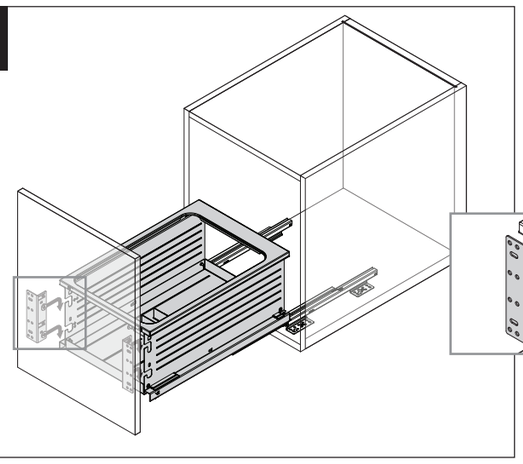

12

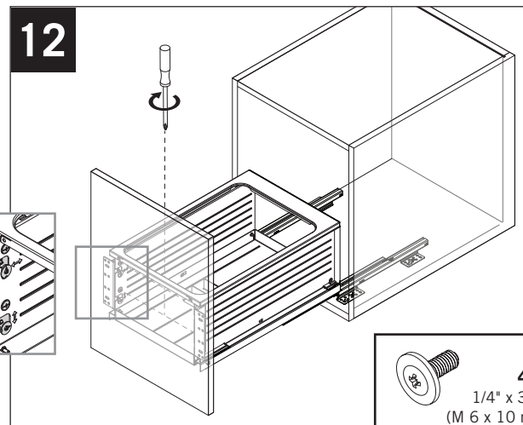

4 x
1/4" x 3/8"
(M 6 x 10 mm)

14

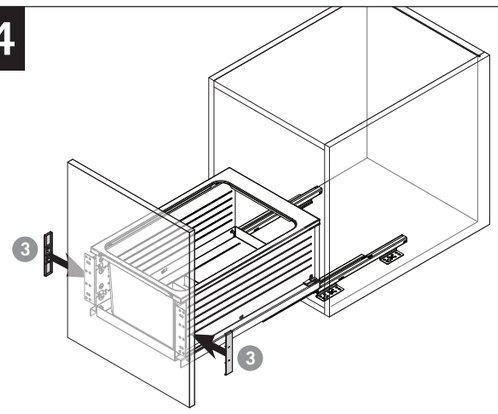

15

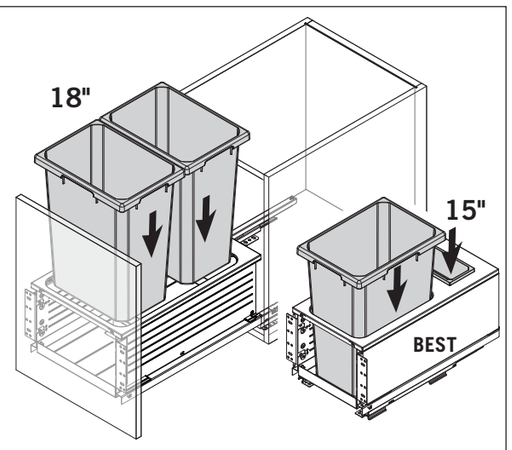

18" 14-11/16" (373 mm)

15" 11-13/16" (300 mm)

13

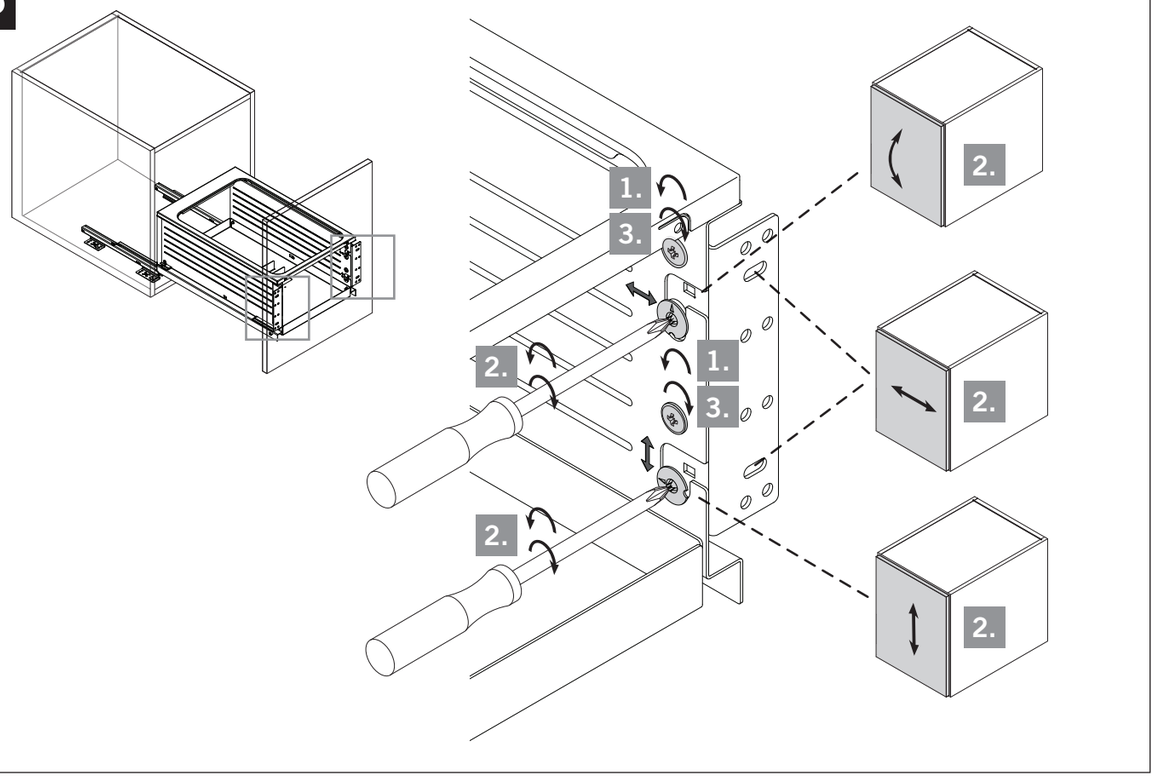

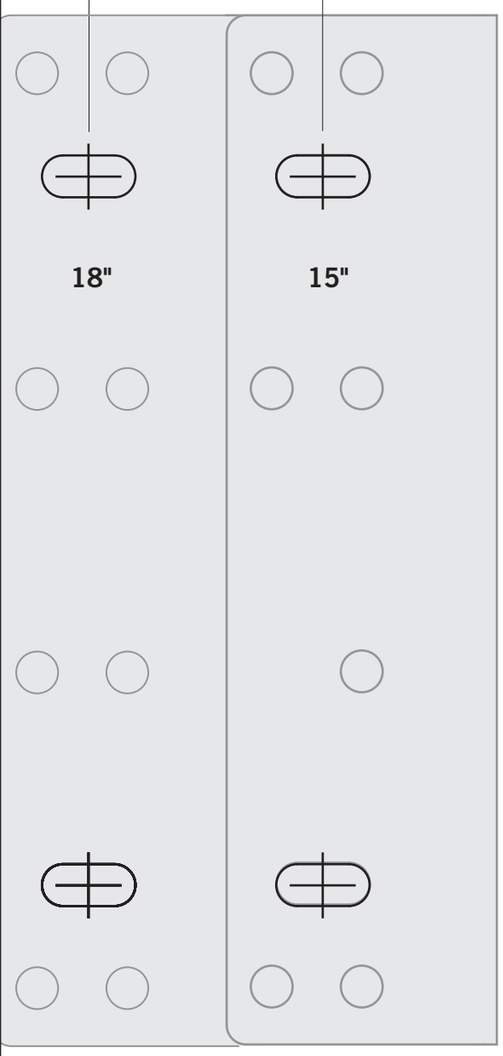

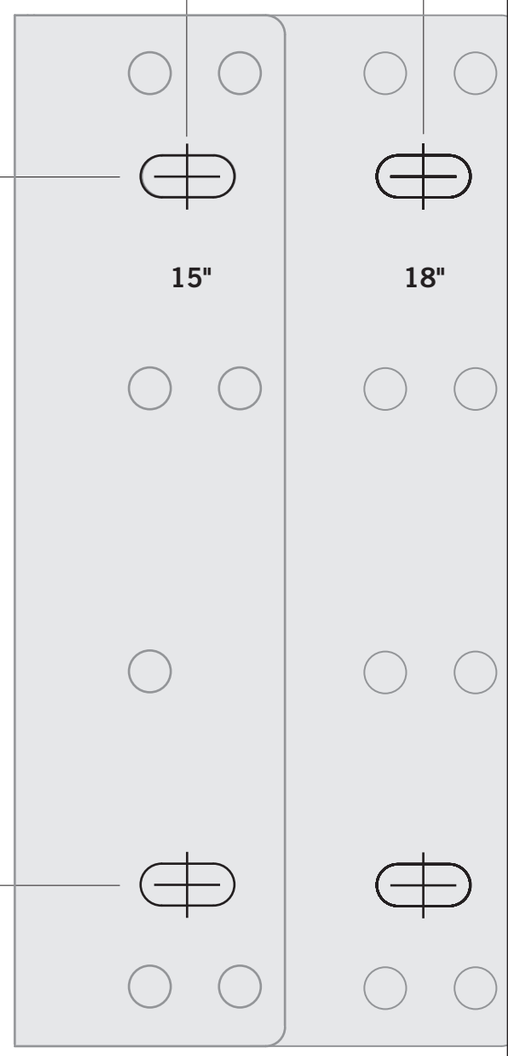

4-5/16" (110 mm)

4-1/16" (103 mm)

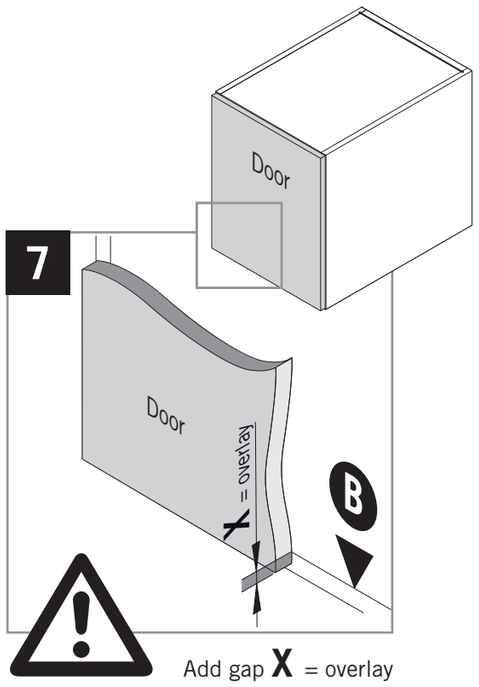



How to dismantle:

Pull out completely

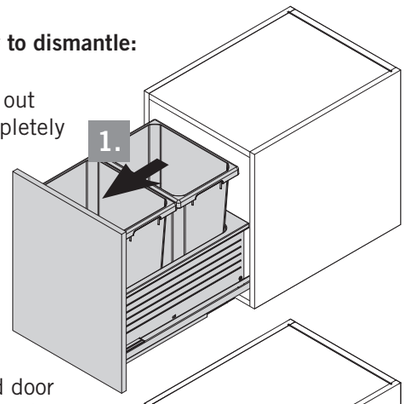

Hold door with both hands and lift up

